TH	THAILAND

Diagram / Parts List

6413

DRILL 10MM

2023/02

(TH) 6413 / DRILL 10MM

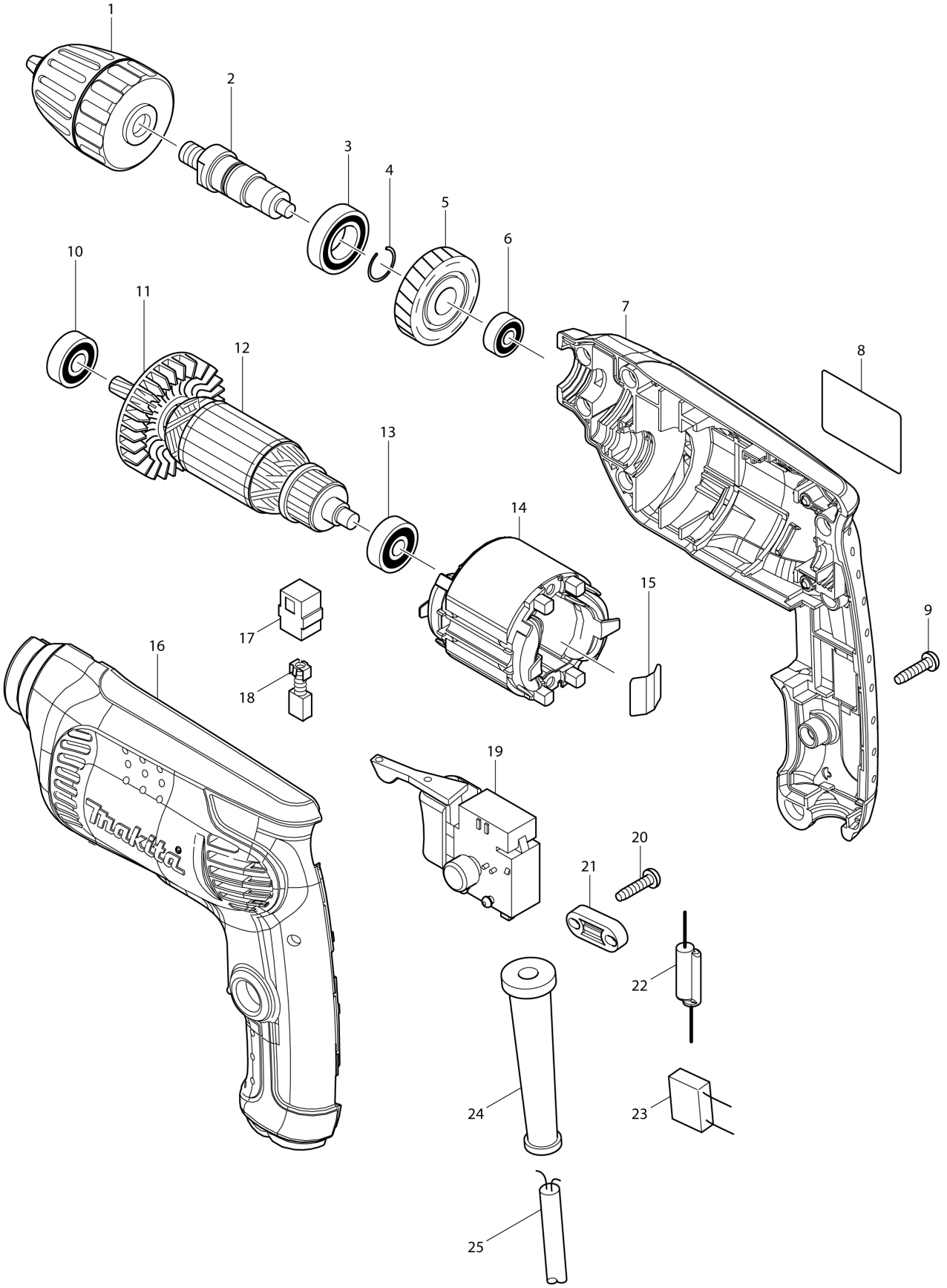

TH	THAILAND

6413 / DRILL 10MM

Item	Sub	Parts No.	Parts Description	Qty	I/C	E/C No.	Close No.	Remark
001		763180-0	KEYLESS DRILL CHUCK 10	1			B4397	
001-1		763242-4	KEYLESS DRILL CHUCK 10	1	<	B4397		
002		324376-4	SPINDLE	1				
003		211242-3	BALL BEARING 6902ZZ	1				
004		233925-5	RING SPRING 13	1				
005		226578-7	HELICAL GEAR 35	1				
006		210028-2	BALL BEARING 606ZZ	1				
007		188277-8	HOUSING SET	1				
	C10	263002-9	RUBBER PIN 4	2				
	D10		INC. 16					
008		863402-9	6413 NAME PLATE	1		94702		
009		266326-2	TAPPING SCREW 4X18	7				
010		211032-4	BALL BEARING 608ZZ	1				
011		240066-0	FAN 52	1				
012		515698-5	ARMATURE ASS'Y 220V	1				
	D10		INC. 10,11,13					
013		210030-5	BALL BEARING 627ZZ	1				
014		593643-0	FIELD ASS'Y 220V	1				
	C10	654037-5	INSULATED TERM. FT1.25-M3	1			Y06150	Y04979
	C11	654037-5	INSULATED TERM. FT1.25-M3	1	O	Y06150	DF755	Y04979
	C12	654409-4	TERMINAL VR1.25-3.5LB	1	O	DF755		Y04979
015		232210-3	LEAF SPRING	1				
016		188277-8	HOUSING SET	1				
	C10	263002-9	RUBBER PIN 4	2				
	D10		INC. 7					
017		643563-9	BRUSH HOLDER 5X8	2			99619	
017-1		643566-3	BRUSH HOLDER 5X8	2	O	99619		
018		A-81206	CARBON BRUSH CB-64A	1			83185	
018-1		B-80195	CARBON BRUSH CB-64A	1	O	83185	85070	
018-2		B-80254	CARBON BRUSH SET CB-64A	1	<	85070		
019		650586-0	SWITCH DGQ-1104H	1				
020		266326-2	TAPPING SCREW 4X18	2				
021		687124-5	STRAIN RELIEF	1				
024		682569-2	CORD GUARD 8-85	1				
025		691055-2	POWER SUPPLY CORD 0.75-2-2.0	1				

A:6413(H)

Interchange
O : Yes
X : No
< : the new part can be substituted for the current.
> : the current part can be substituted for the new.
S : Interchangeable as a set.